DocuSign Envelope ID: C5D63514-B8CA-48D7-AD5E-F8304BB92BF8

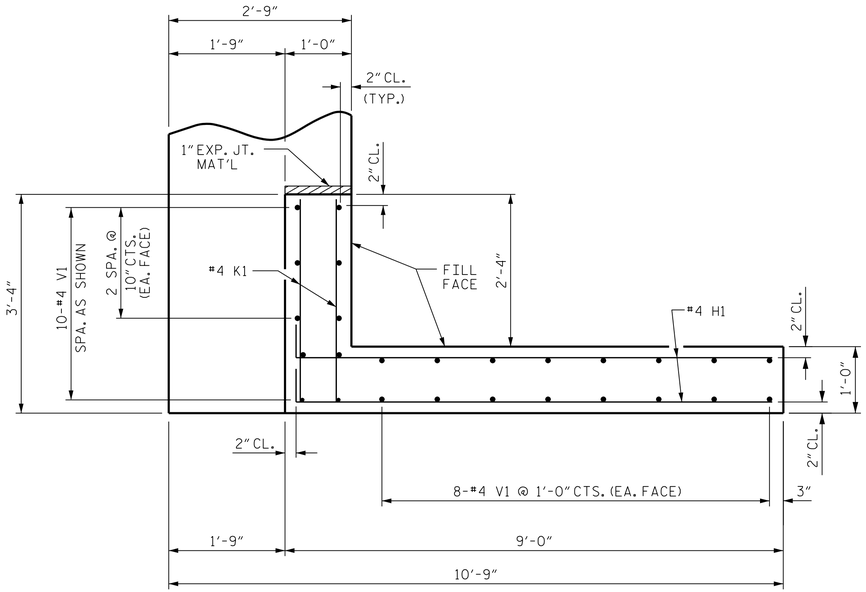

PLAN OF WING (W1)

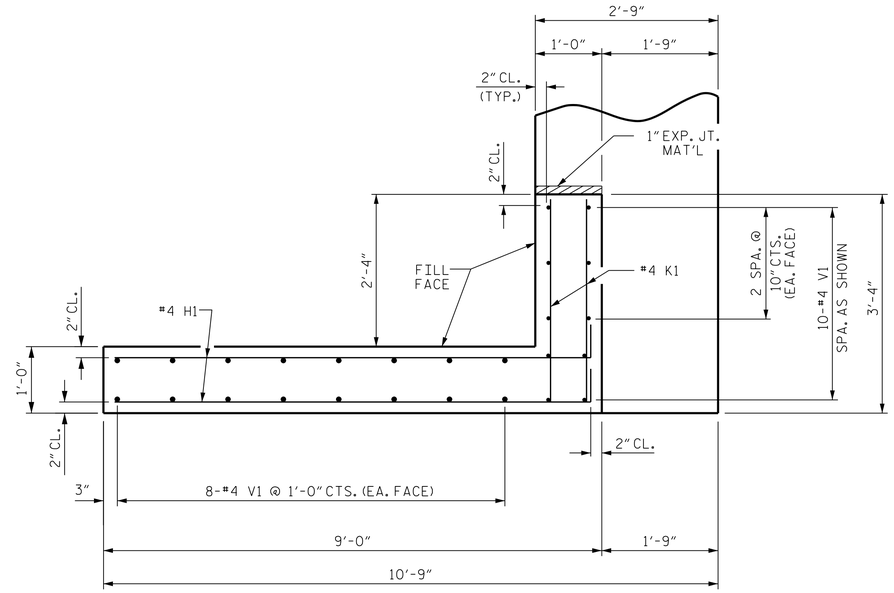

PLAN OF WING (W2)

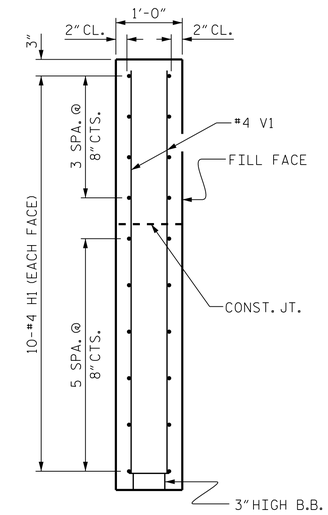

SECTION X-X

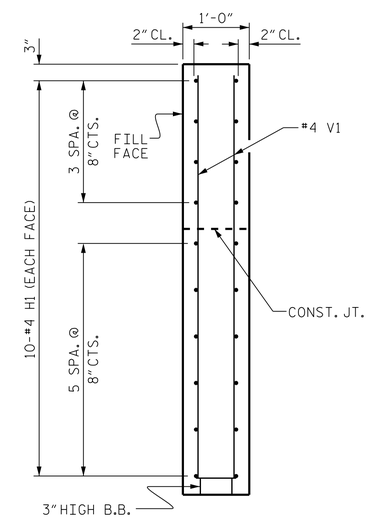

SECTION Y-Y

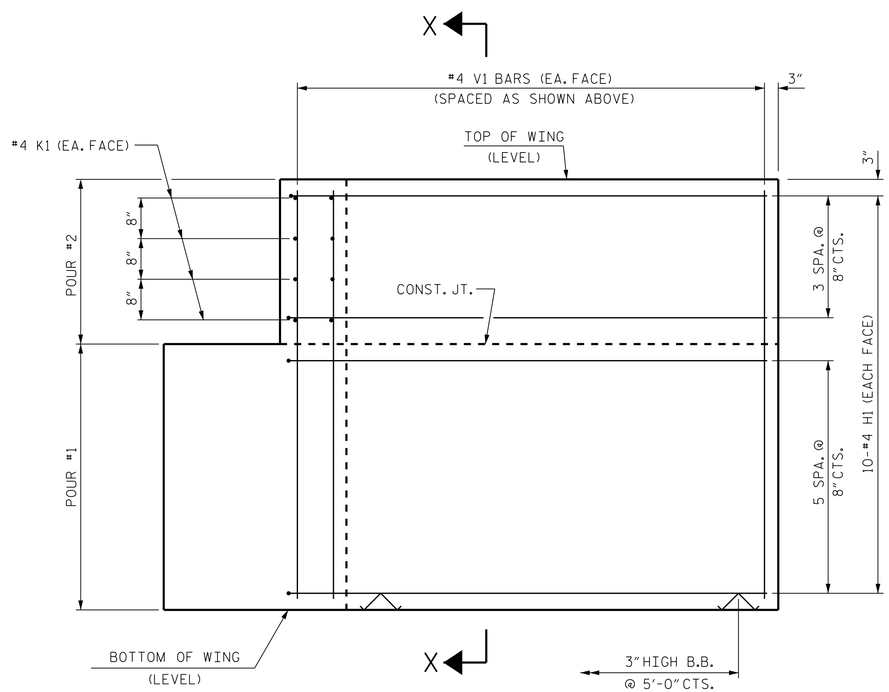

ELEVATION OF WING (W1)

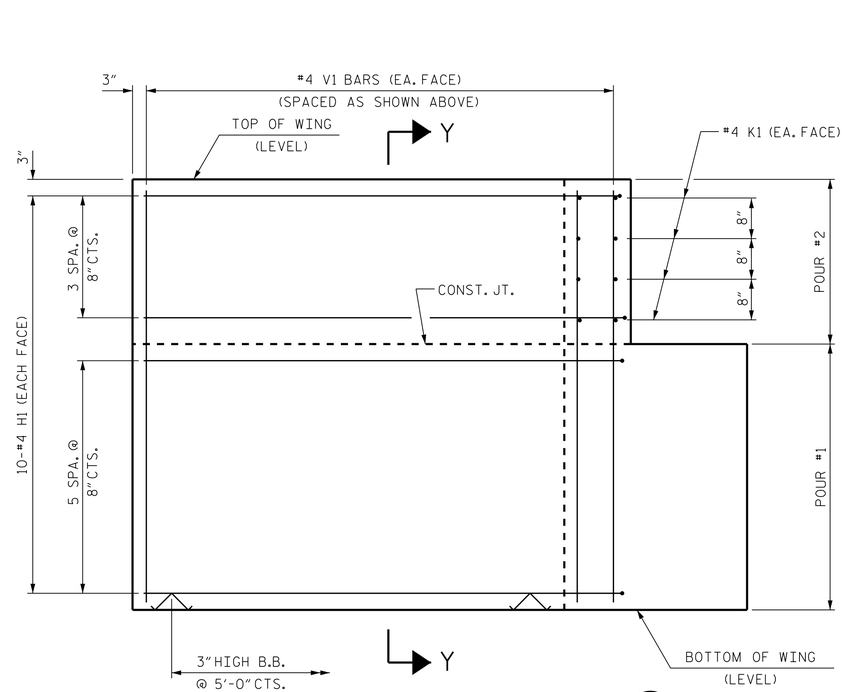

ELEVATION OF WING (W2)

WING DETAILS

PROJECT NO. 17BP.4.R.89

WAYNE COUNTY

STATION: 15+02.00 -L-

SHEET 3 OF 4

STATE OF NORTH CAROLINA
DEPARTMENT OF TRANSPORTATION
RALEIGH

BRIDGE NO. 950290

SUBSTRUCTURE

END BENT
WING DETAILS

RK&K
RUMMEL, KLEPPER & KAHL, LLP
900 RIDGEFIELD DRIVE SUITE 350
RALEIGH, NC 27609-3960 (919) 878-9560
NC LICENSE NUMBER: F-0112

NORTH CAROLINA PROFESSIONAL SEAL 4045 ENGINEER TIMOTHY L. COGGINS
Timothy L. Coggins
5/23/2018

DOCUMENT NOT CONSIDERED FINAL UNLESS ALL SIGNATURES COMPLETED

REVISIONS							SHEET NO.
NO.	BY:	DATE:	NO.	BY:	DATE:		S-11
1			3				TOTAL SHEETS
2			4				15

DRAWN BY : L.A. TUTT DATE : JAN 2018
CHECKED BY : O.J. PAITEL DATE : JAN 2018
DESIGN ENGINEER OF RECORD : T.L. COGGINS DATE : JAN 2018

opaitel
1/26/2018 R:\Structures\DGN\FINAL PLANS\950290_STR_EBW.dgn