DocuSign Envelope ID: C5D63514-B8CA-48D7-AD5E-F8304BB92BF8

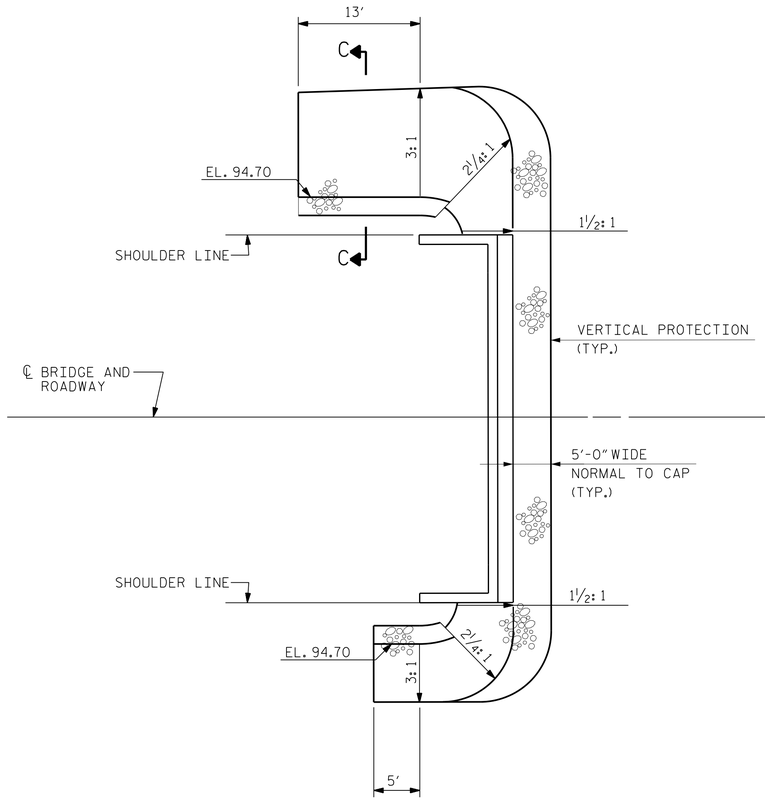

END BENT 1

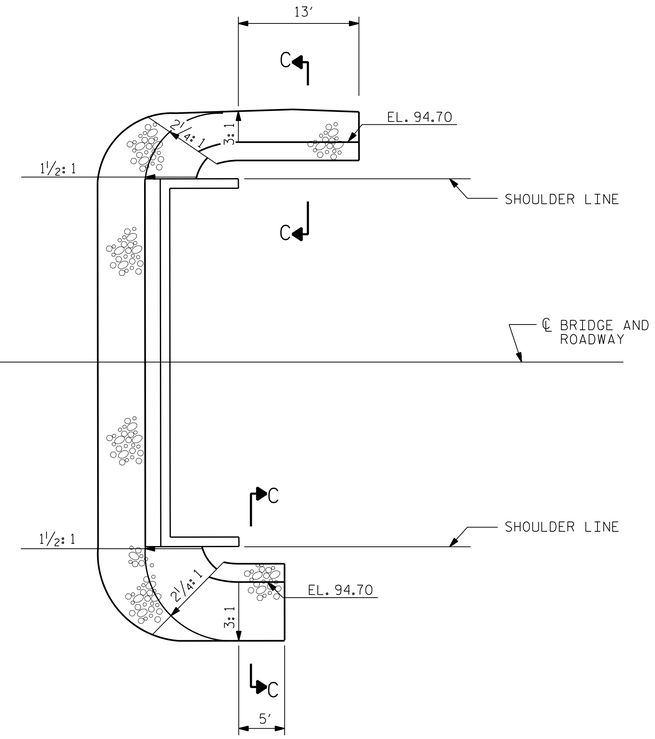

END BENT 2

PLAN

ESTIMATED QUANTITIES		
BRIDGE @ STA. 15+02.0 -L-	RIP RAP CLASS II (2'-0" THICK)	GEOTEXTILE FOR DRAINAGE
	TONS	SQUARE YARDS
END BENT 1	650	335
END BENT 2	665	240
TOTAL	1315	575

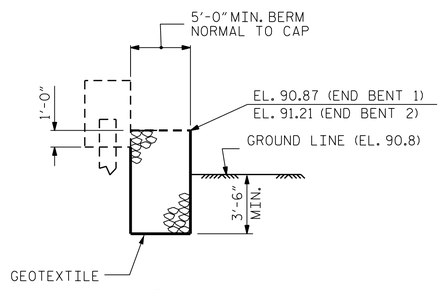

℄ SECTION

BERM RIP RAPPED

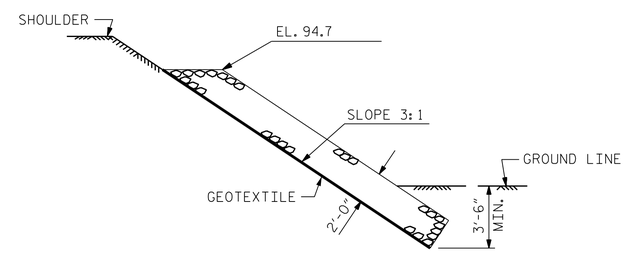

SECTION C-C

PROJECT NO. 17BP.4.R.89

WAYNE COUNTY

STATION: 15+02.00 -L-

STATE OF NORTH CAROLINA
DEPARTMENT OF TRANSPORTATION
RALEIGH

STANDARD

RIP RAP DETAILS

BRIDGE NO. 950290

NORTH CAROLINA PROFESSIONAL SEAL 19045 ENGINEER TIMOTHY L. COGGINS

5/23/2018

RK&K
RUMMEL, KLEPPER & KAHL, LLP
900 RIDGEFIELD DRIVE SUITE 350
RALEIGH, NC 27609-3960 (919) 878-9560
NC LICENSE NUMBER: F-0112

DOCUMENT NOT CONSIDERED FINAL
UNLESS ALL SIGNATURES COMPLETED

REVISIONS						SHEET NO.
NO.	BY:	DATE:	NO.	BY:	DATE:	S-13
1			3			TOTAL SHEETS
2			4			15

DRAWN BY :	L.A. TUTT	DATE :	JAN 2018
CHECKED BY :	O.J. PAITEL	DATE :	JAN 2018
DESIGN ENGINEER OF RECORD :	T.L. COGGINS	DATE :	JAN 2018

opaitel
1/26/2018 R:\Structures\DGN\FINAL PLANS\rr1_18.dgn